KB241,2,8ACL
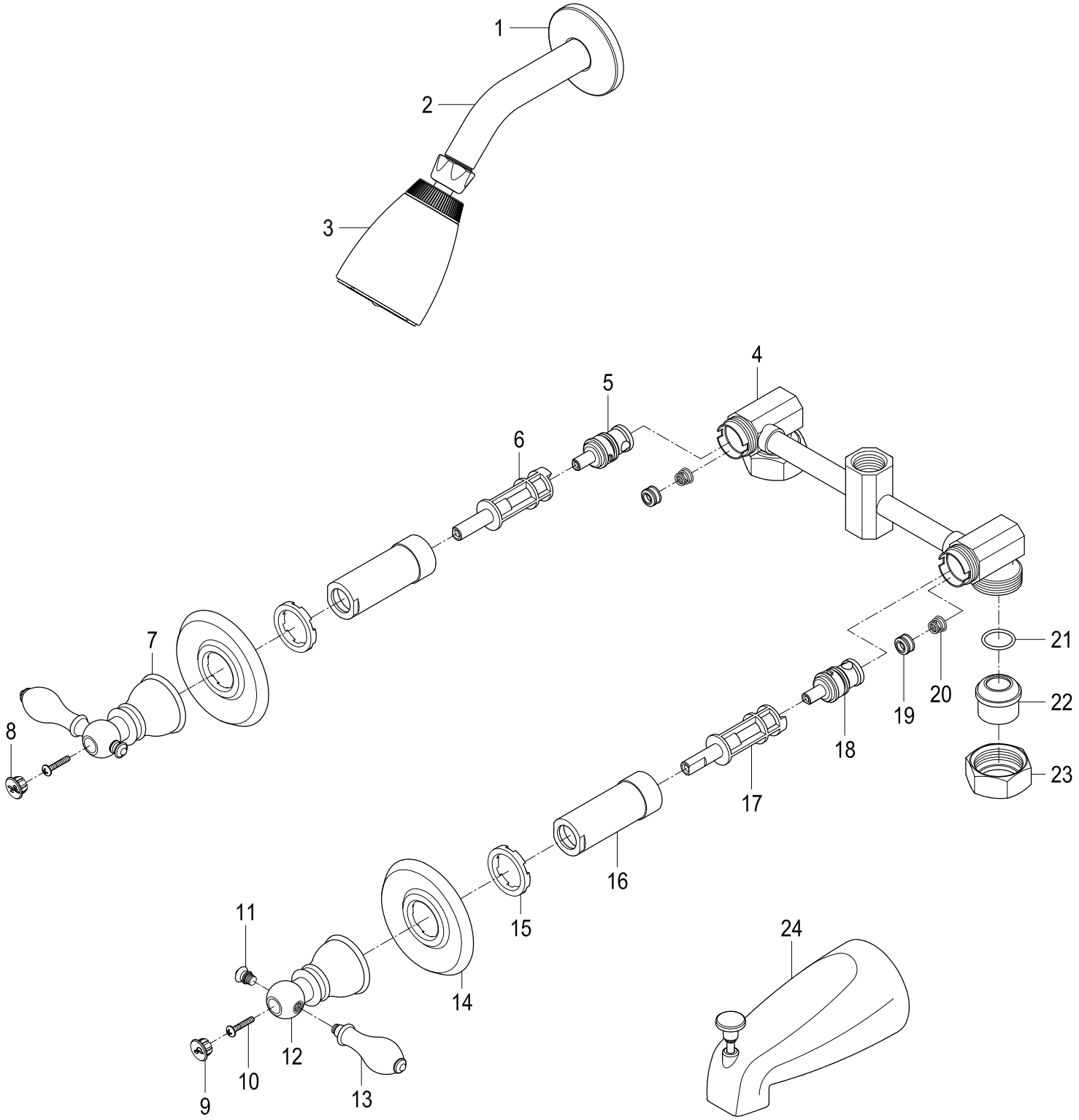
Twin Handles Tub & Shower Faucet